THIS DRAWING AND SPECIFICATIONS ARE THE PROPERTY OF THE PERFORMANCE WINDOW GROUP. THEY ARE ISSUED IN STRICT CONFIDENCE AND SHALL NOT BE REPRODUCED, COPIED OR USED AS THE BASIS FOR MANUFACTURING WITHOUT WRITTEN PERMISSION.

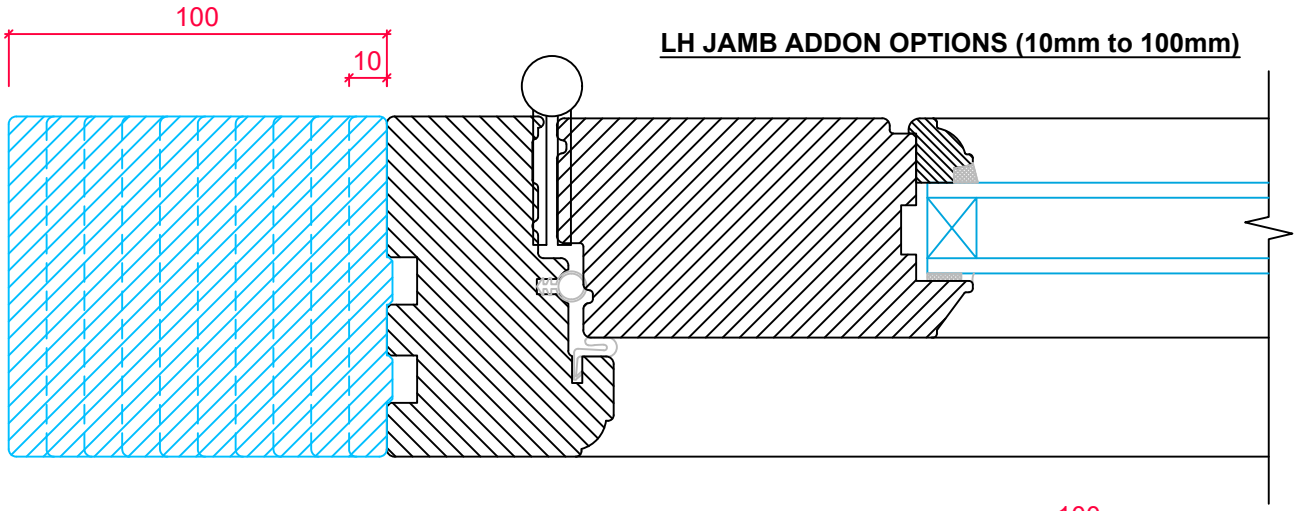

LH JAMB ADDON OPTIONS (10mm to 100mm)

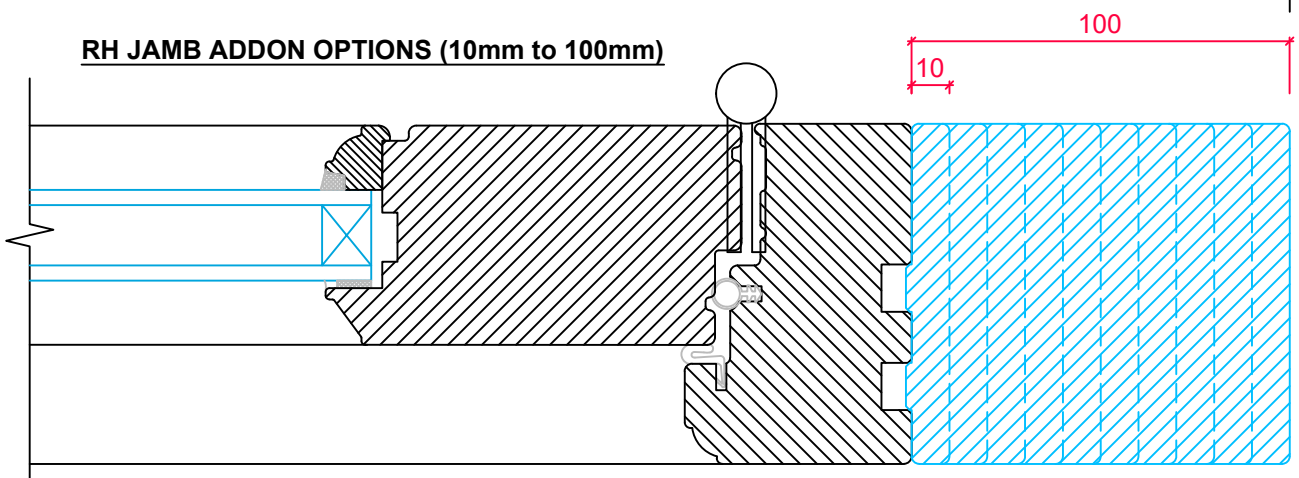

RH JAMB ADDON OPTIONS (10mm to 100mm)

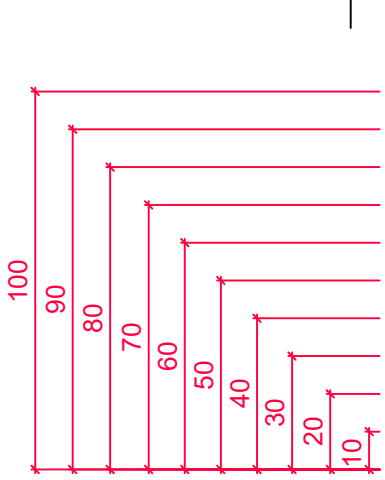

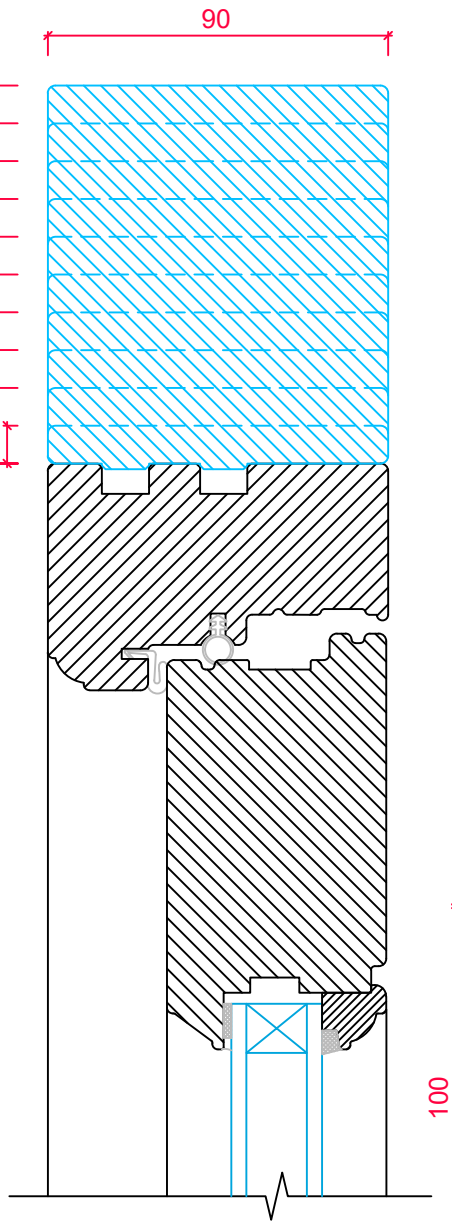

HEAD ADDON OPTIONS
(10mm to 100mm)

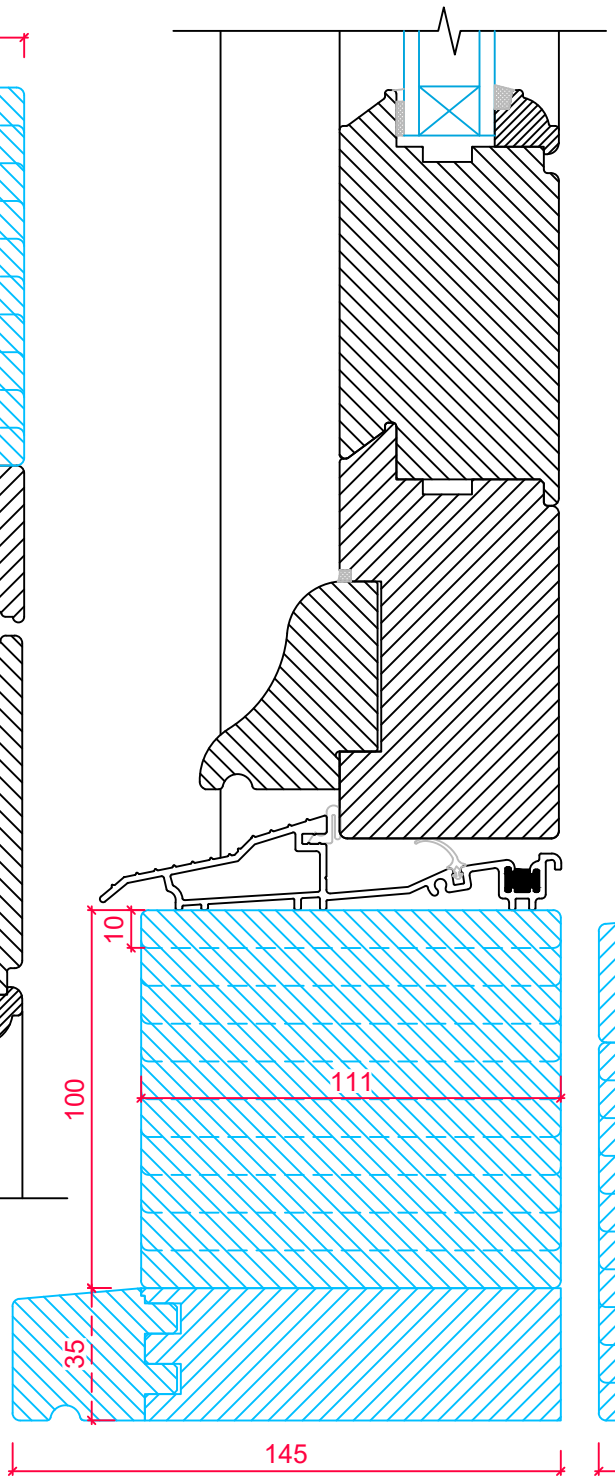

BOTTOM ADDON OPTIONS ABOVE TIMBER CILL (10mm to 100mm)

TIMBER CILL OPTIONAL.
SEE CILL OPTIONS DRAWING.

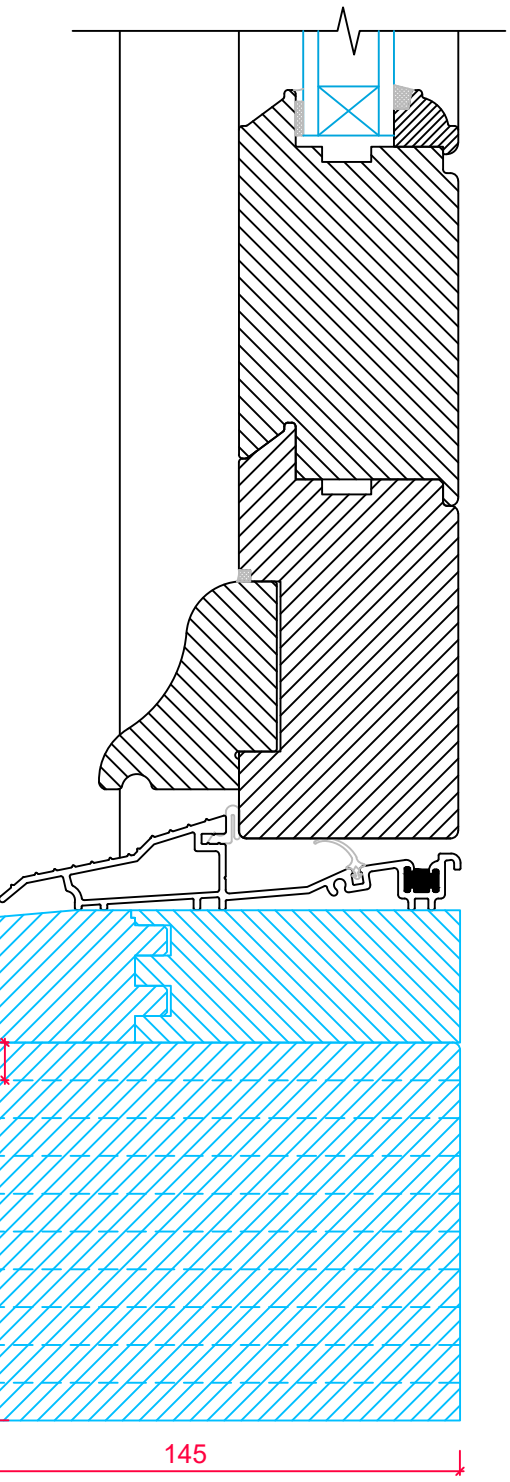

BOTTOM ADDON OPTIONS BELOW TIMBER CILL (10mm to 100mm)

TIMBER CILL OPTIONAL.
SEE CILL OPTIONS DRAWING.

TIMBER WINDOWS EST. 2004

TOLERANCES
UNLESS OTHERWISE SPECIFIED

ALL DIMENSIONS IN MM
ALL LINEAR DIMENSIONS ±0.4
ALL ANGLE DIMENSIONS ±0.5°
BREAK ALL SHARP EDGES 0.5

PRODUCT RANGE:
ENTRANCE DOOR - OPEN IN (Ovolo)
24mm Unit

TITLE
HORIZONTAL AND VERTICAL SECTION DETAILS
- ADDON OPTIONS

Rev B

DRAWN BY:	LH	DATE DRAWN:	01/03/2017	SCALE:	1:2

ALL MEASUREMENTS ARE FINISHED DIMENSIONS IN MM. DO NOT SCALE DRAWING! Din A3